AIR SPACE

交流离心風機

www.pudaelec.com

JH225 Series

AC Centrifugal Fan Ø225 x 87 / 101 mm

Impeller : 7 blades,made of GRP (PA 66) UL94 V-0

風　輪: 7叶,玻璃增强热固性塑料(尼龍66),阻燃等级UL94V-0

Motor : Enter rotor & capacitor-run induction motor

電　機: 外转子电容运转异步電機

Degree of protection : IP44

防护等级: IP44

Insulation class : F

绝缘等级:F

Operating temperature : -25~+70°C

工作温度: -25~+70°C

Model (型号)	Bearing System (轴承)	Rated Voltage (电压) [VAC]	Freq. (频率) [Hz]	Current (电流) [A]	Input power (功率) [W]	Speed (转速) [RPM]	Maximum Air Flow (风量) [CFM]	Maximum Air Flow (风量) [m³/h]	Max. Static Pressure (静压) [in-H₂O]	Max. Static Pressure (静压) [Pa]	Niose Level (噪音) [dB-A]	Mass (质量) [g]
JH225B2E02	Ball	1~230	50	0.70	160	3000	683	1160	2.61	650	73	2100
JH225B2E03	Ball	3~380	50	0.31	160	2650	618	1050	2.05	510	70	2100
JH225C2E01	Ball	1~115	60	1.70	195	2900	789	1340	2.81	700	71	2350
JH225C2E02	Ball	1~230	50	0.65	140	2600	706	1200	2.21	550	69	2350

Dimensions Drawing

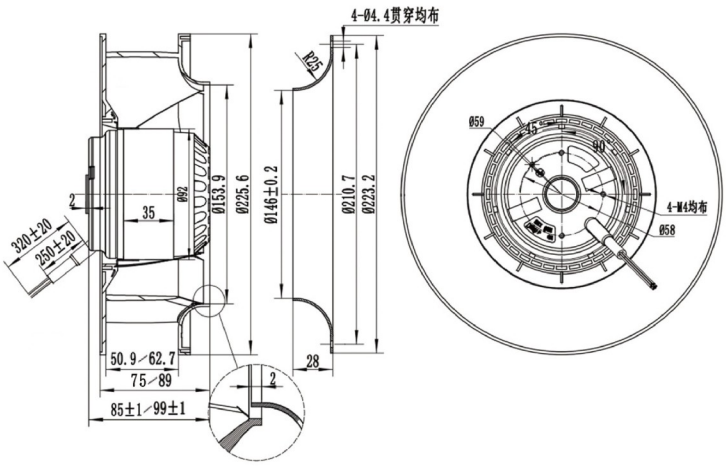

Air Flow & Static Pressure Curve

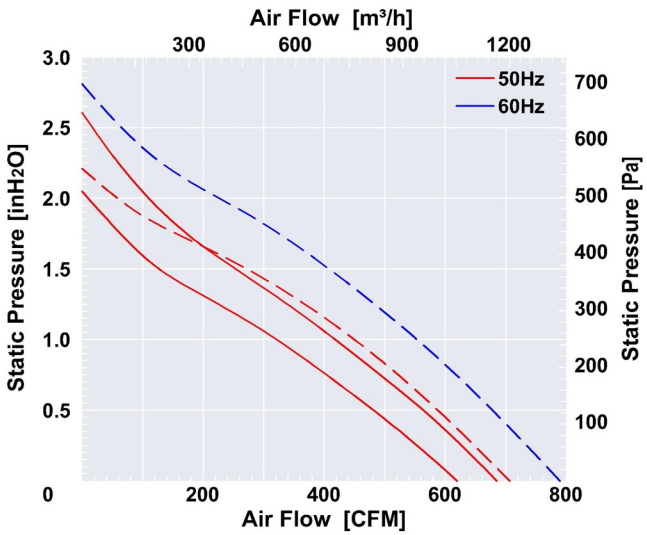

Above specification is only for reference and subject to change without notice.

以上数据仅供参考，如有变更恕不另行通知。

普新惠达