AUTO RESTAR | PWM | FG | RD SIGNAL H | RD SIGNAL L

DC Centrifugal Fan
Ø400 x 167 mm

YY400 Series

Impeller : 6 blades,made of aluminum

風　輪: 6叶,铝制

Motor : DC brushless motor

電　機: 直流无刷電機

Degree of protection : IP54

防护等级: IP54

Operating temperature : -25~+70°C

工作温度: -25~+70°C

Model (型号)	Bearing System (轴承)	Rated Voltage (电压) [VDC]	Voltage Range (电压范围) [VDC]	Current (电流) [A]	Speed (转速) [RPM]	Maximum Air Flow (风量) [CFM]	Maximum Air Flow (风量) [m³/h]	Max. Static Pressure (静压) [in-H2O]	Max. Static Pressure (静压) [Pa]	Niose Level (噪音) [dB-A]	Mass (质量) [g]
YY400L48	Ball	48	36.0~54.0	5.6	1220	1372.7	2333.6	2.16	538.1	61.4	4500
YY400M48	Ball	48	36.0~54.0	6.9	1370	1541.5	2620.6	2.725	678.6	63.9	4500
YY400H48	Ball	48	36.0~54.0	8.5	1500	1687.8	2869.3	3.267	813.4	74	4500

Air Flow & Static Pressure Curve

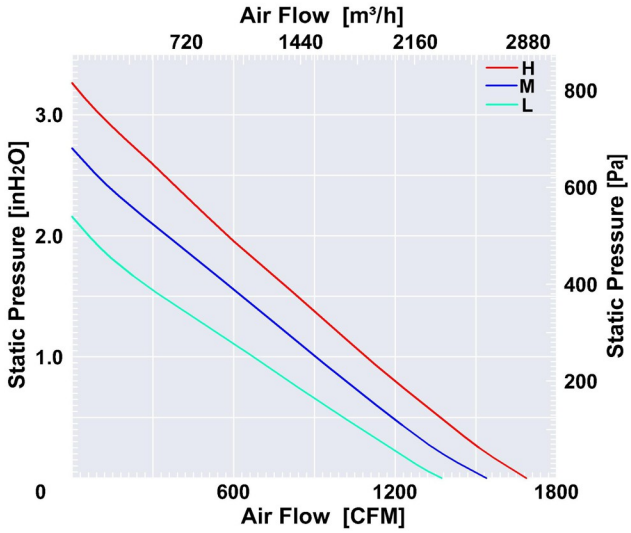

Dimensions Drawing

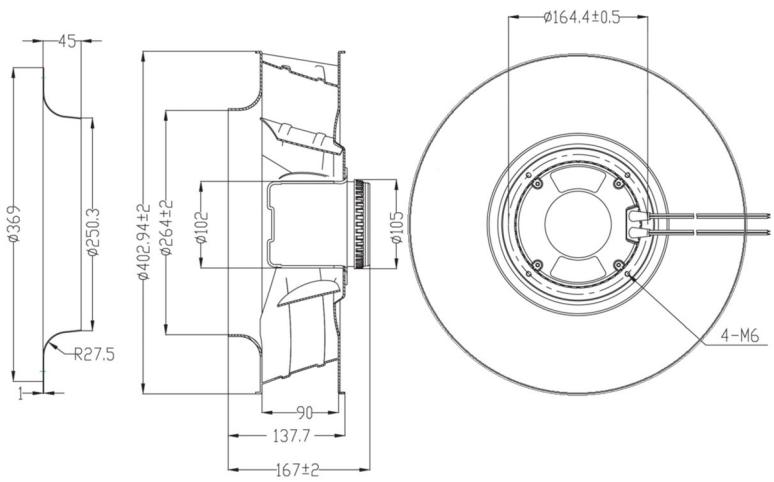

普新惠达

Above specification is only for reference and subject to change without notice.
以上数据仅供参考，如有变更恕不另行通知。

AIR SPACE

直流离心風機

www.pudaelec.com