AIR SPACE

电机

www.pudaelec.com

7520
[内转子]
Series

BLDC MOTOR
Internal Rotor

RoHS

Mode of Operation : S1(Continuous Operation)
工作模式: S1(连续运转)

Degree of Protection : IP42
保护程度: IP42

Insulation Class : B
绝缘等级: B

Features : PG , Auto-Restar , SS , Vc(0-5VDC) , PWM
功能: 转速脉冲输出，自动重启，软起动，控制输入电压（0-5VDC），脉宽调制控制。

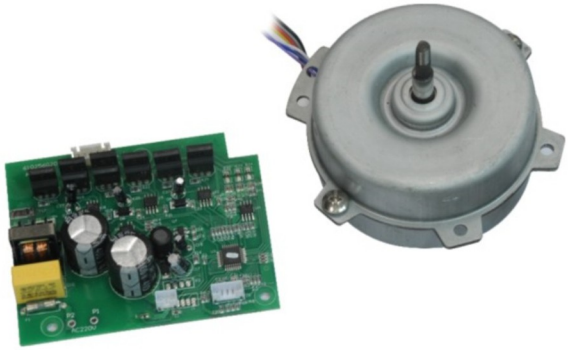

Model (型号)	Bearing System (轴承)	Rated Voltage (电压) [VDC]	Voltage Range (电压范围) [VDC]	Free Load 空载		At Max. Efficiency 最大效率				At Max. Output Power 最大功率	Mass (质量) [g]
				Current (电流) [A]	Speed (转速) [RPM]	Current (电流) [A]	Output Power (输出功率) [W]	Speed (转速) [RPM]	Torque (扭矩) [mN*m]	Torque (扭矩) [mN*m]	
TD752012H	BALL	12	6---13.8	0.27	1900	1.97	14.58	1478	92	237.63	770
TD752024H	BALL	24	12---26.4	0.14	1900	0.98	14.58	1478	92	237.63	770

Dimensions Drawing [mm]

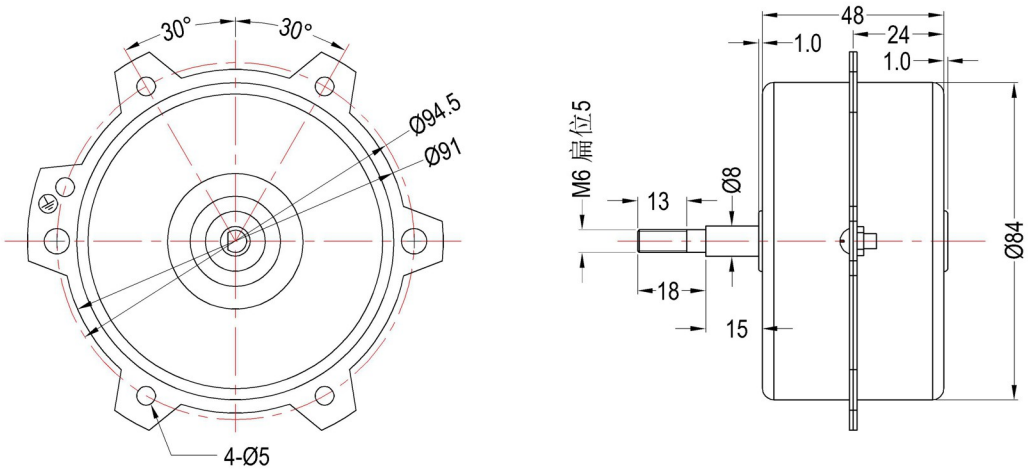

Motor Characteristics

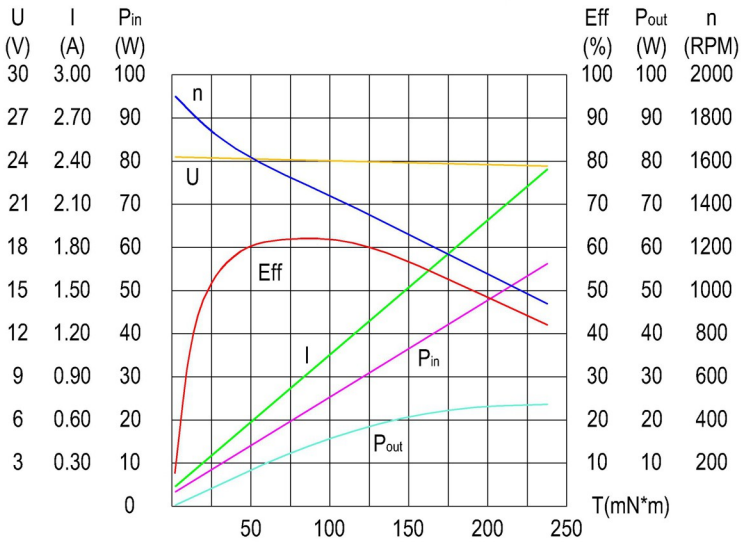

Above specification is only for reference and subject to change without notice.
以上数据仅供参考，如有变更恕不另行通知。

普新惠达